Dimension Guide

Built-in induction hob

500 SERIES

Model:
EHI7276BF

Dimensions

	width	height	depth
Cut-out (mm)	690	56	380
Product (mm)	700	60	430

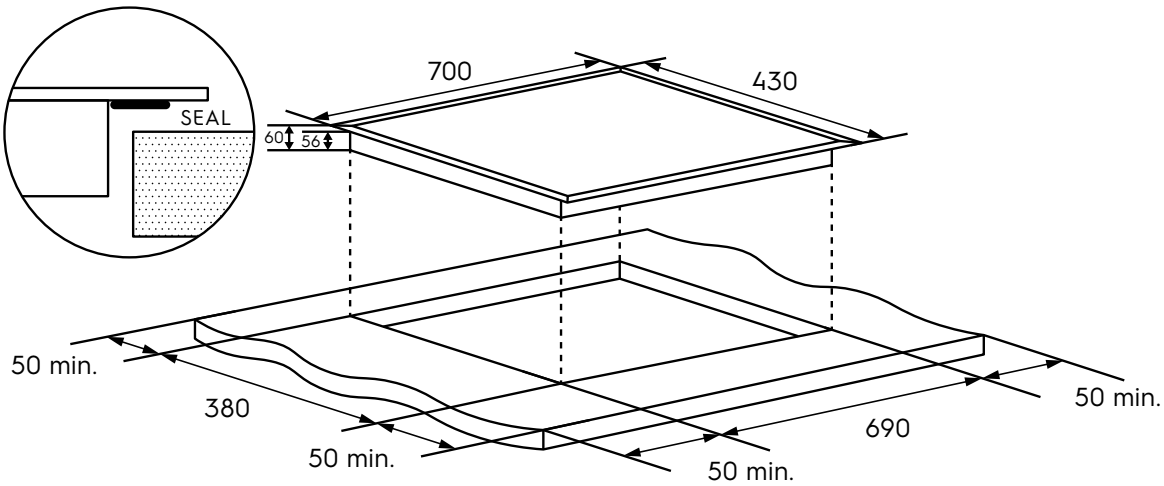

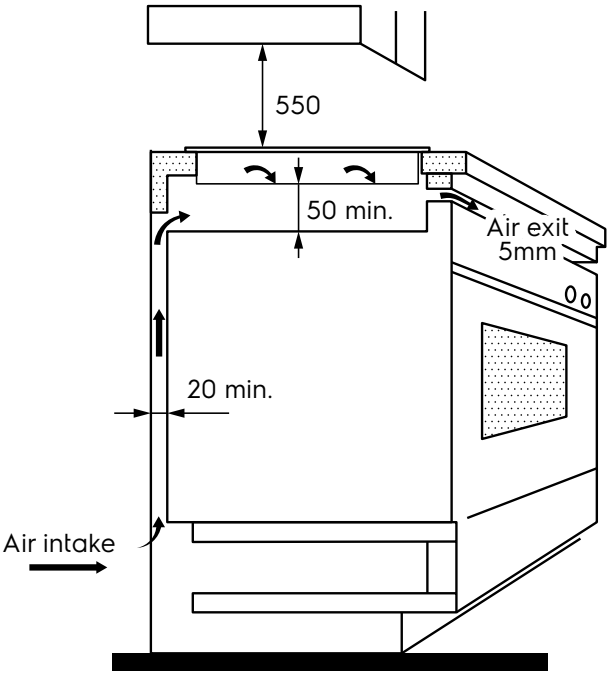

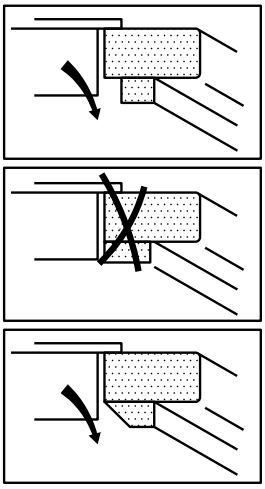

Please note! Dimensions to be used as a guide only. All customers MUST refer to the user manual supplied with the product for detailed installation instructions.

© 2025 Electrolux S.E.A PTE. LTD. ELX_DIM_EHI7276BF_Oct25

Electrolux